AZO dosing screws
type DFS ... DE
for conveying and dosing

Precise feeding of several production lines

Sturdy construction

High output in coarse-stream and highest dosing accuracy in fine-stream operation

Preferred applications

For continuous and discontinuous conveying and metering of bulk materials in several conveying ines and scales etc. These units can be used for almost all kinds of bulk materials in the food, plastics, chemical and pharma-ceutical industry.

Special advantages

- Precision feeding to several production lines
- Flexible conveying in lines
- High-quality nickel chromium steel design
- Sturdy construction suitable for vibration-assisted operation
- High output in coarse-stream and supreme metering accuracy in fine-stream operation
- Easy inspection and cleaning due to quick-release clamps

THE INNOVATION

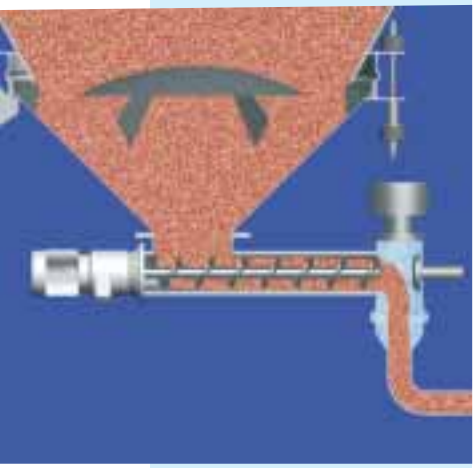

How it works

The bulk material enters the second screw via the product in-let of the first screw and is then transferred to the screw outlet. The metering screw is activated and rotates picking up product and conveying it uniformly to the screw outlet. The frequency control of the drive changes over from coarse to fine metering in metering and weighing operations. This means that the speed of the metering screw is reduced correspondingly. When the set weight has been reached, a pneumatically operated shutoff valve closes the screw outlet.

AZO®
Right to the point.

7812 0027 E

Technical data

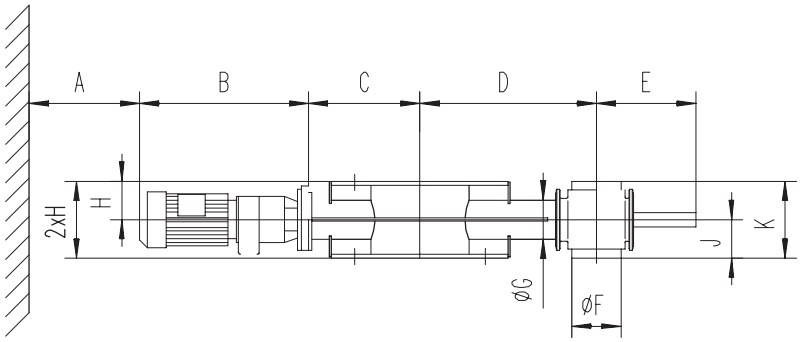

A= Space requirement for removing the screw shaft
B= Length of drive unit
1) Slow running motor
2) Standard motor
3) Fast running motor
D= Length corresponds to job
E= Version of discharge lock
4) Not dismountable
J= No mounted parts
K= No mounted parts
W= 15° Hole not on the axis (type NA)
0° Hole on the axis (type AA)

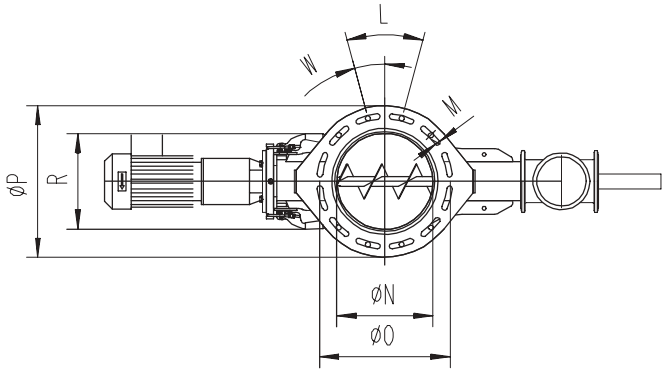

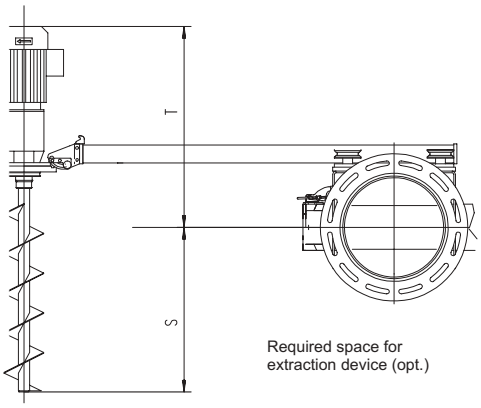

Diameter of product inlet 250 mm (type DE 250)

Type	A	B	C	D	E	ØF	ØG	H	J	K	L	M	ØN	ØO	ØP	R	S	T
DFS 50	D+240	394 1) 403 2) 453 3)	290	D	260 80 4)	100	48	100	80	160	12x30°	14	250	340	395	216	---	---
DFS 70	D+240	381 1) 390 2) 440 3)	290	D	260 80 4)	100	70	100	80	160	12x30°	14	250	340	395	216	---	---
DFS100	D+230	390 1) 440 2) 460 3)	290	D	295 96 4)	128	102	100	100	200	12x30°	14	250	340	395	248	D* + 65	B* + 130

Diameter of product inlet 300 mm (type DE 300)

Type	A	B	C	D	E	ØF	ØG	H	J	K	L	M	ØN	ØO	ØP	R	S	T
DFS 50	D+270	394 1) 403 2) 453 3)	320	D	260 80 4)	100	48	100	80	160	12x30°	14	300	390	445	216	---	---
DFS 70	D+270	381 1) 390 2) 440 3)	320	D	260 80 4)	100	70	100	80	160	12x30°	14	300	390	445	216	---	---
DFS100	D+260	390 1) 440 2) 460 3))	320	D	295 96 4)	128	102	100	100	200	12x30°	14	300	390	445	248	D* + 85	B* + 130
DFS140	D+230	474 1) 494 2) 494 3)	320	D	425 138 4)	193	140	125	125	250	12x30°	14	300	390	445	284	D* + 25	B* + 180
DFS200	D+220	441 1) 453 2) 522 3)	350	D	580 198 4)	303	206	210	185	370	12x30°	14	300	390	445	384	D* + 55	B* + 170

AZO®
Right to the point.
AZO GmbH + Co. KG
D-74706 Osterburken
Tel. +49 6291 92-0
Fax: +49 6291 92-9500
info@azo.de, www.azo.de

The design is subject to change due to our continuous improvement program.